A&J Washroom Accessories

U704 Series

Fixed Tilt Angle Frame Mirror

Revision 02/12

JOB #:

ITEM #:

QUANTITY:

MOUNTING	HANDING	TYPE	SIZE	OTHER

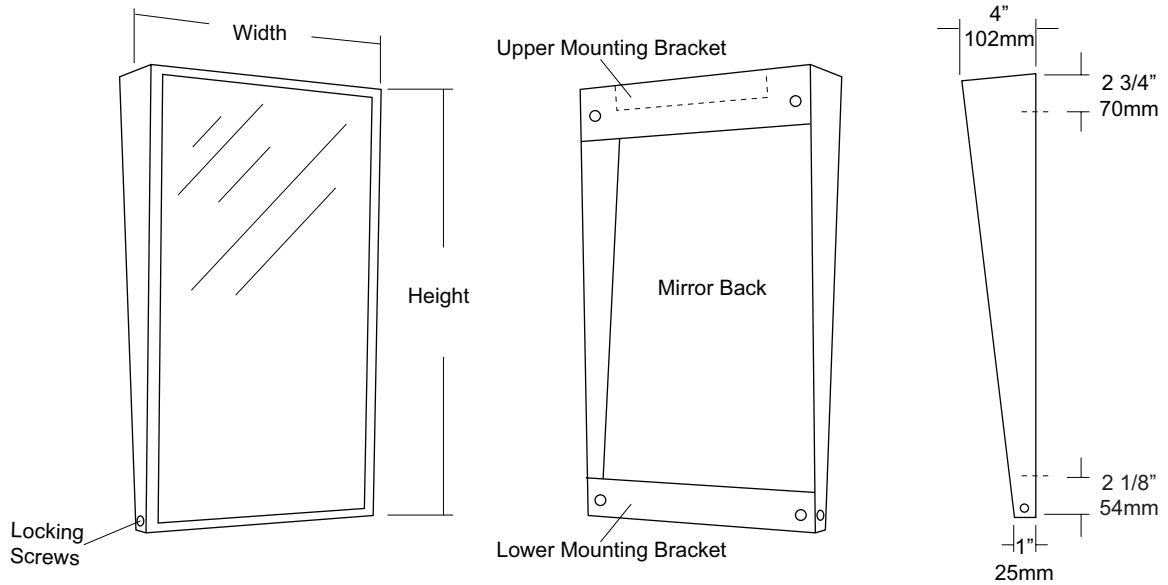

SPECIFICATIONS

Frame: Fabricated of #18 ga stainless steel, #4 satin finish. Stainless steel frame is fabricated with welded mitered corners that are ground and polished smooth. Mirror extends out 4” at top and tapers to 1” at bottom.

Mirror: 1/4” thick type 1 transparent flat type, class 1 - clear glass mirrors. Mirror is coated with silver and sealed with a uniform electrolytic copper plating, along with two coats of paint for added protection. Mirrors are guaranteed against silver spoilage for a period of 15 years. Mirrors conform to ASTM C1036 and ASTM C1503-R8.

Filler: 3/16” thick full size, shock absorbing, water resistant, non-abrasive polyethylene padding protects all concealed mirror surfaces

Brackets: Mounting brackets are fabricated of #20 ga pre-plated, galvanized steel. Lower bracket has two (2) side mounting points that allow frame to be secured to bracket.

Standard Sizes Available (W x H): 16”x24”, 16”x30”, 18”x24”, 18”x30”, 18”x36”, 24”x30”, 24”x36”

Options:

-VC: Safety Glass (Vinyl Clad)

-T: Tempered Glass

-LG: Laminated Glass

-PM: Plastic Acrylic

-8B: #8 Reflective Surface

-LX: Polycarbonite

Mirrors conform to Federal Specifications DD-M-00411b & DD-g-541D.

Mirrors are always ordered Width x Height

Framed mirrors are fabricated to a tolerance of 1/8”.

INSTALLATION

Coordinate installation with architect / contractor for specific mounting location and height for each mirror application. Check all state an local codes for installation requirements. Remove hanger brackets and transfer mounting points to wall surface. Secure with proper fasteners for each application. Slide mirror frame over brackets and secure in place. Secure frame to bracket. Fillers are available if mirrors are mounted above and below tile line. (U004 Filler) Filler material will match mirror frame to form a one piece construction.

To meet ADA Code, bottom edge of reflective surface can be no higher than 40” above finished floor. (4.19.6) Full length mirrors may be used for universal application when installed in correct locations.

Abrasive cleaners & chloric solutions should not be used on mirrors. Discoloring or scratching may occur on frame and reflective surface.

NOTES

.